California Polytechnic State University Pomona
DEPARTMENT OF ELECTRICAL & COMPUTER ENGINEERING

Circuit Analysis 2 Laboratory

ECE 2101L-03
Report #6

RL & RC Circuits I

Prepared by
Kevyn Santos & Kaung Nyi Naing

Presented to
Sasoun Torousian

March 12, 2024

Introduction

In this lab, we will examine the voltage and current relationships of parallel RL and RC circuits. Since we need to use Kirchhoff's Current Law to analyze parallel circuits we need to know the differences and similarities between parallel phasor circuits compared to serial phasor circuits and parallel DC circuits. When it comes to phase, we know that the voltage and current of resistors are in phase, capacitors lag by 90 degrees and inductors lead by 90 degrees. We will also use a different technique for measuring the currents of our circuit branches since the oscilloscope is unable to directly measure them.

Parts List:

Resistor-1 k, Inductor10 mH, Capacitor-10 nF, Resistor-10

Pre Lab:

1- Determine the impedance and the phase angle in each circuit in Figure 1 parts (a) and (b).

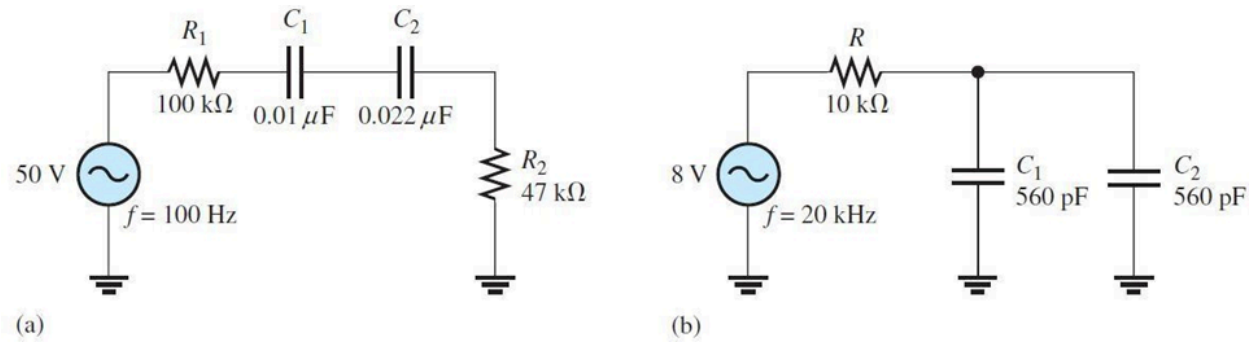

Figure 1

1(a) Z_{total} = 147000.0 - 954929.7j Ohms
= 966177.9 ∠ -81.24869° Ohms

1(b) Z_{total} = 10000.0 - 7105.131j Ohms
= 12267.15 ∠ -35.39429° Ohms

2- Determine the output voltage for the circuit in Figure 2 for each of the following failure modes, and compare it to the correct output:

(a) R1 open **(b) R2** open **(c)** C open **(d)** C shorted

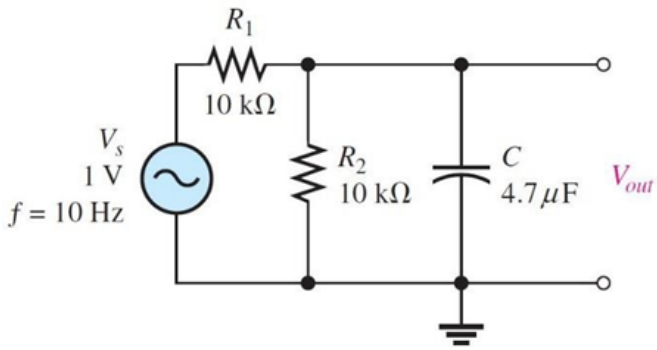

Figure 2

(a) Vout = 0
(b) Vout = 0.1028724 - 0.3037921j V
= 0.3207372 ∠ -71.29248° V
(c) Vout =0.5 V = 0.5 ∠ 0° V
(d) Vout = 0

3- For the lag circuit in Figure 3, determine the phase lag of the output voltage with respect to the input for the following frequencies:
(a) 1 Hz **(b)** 100 Hz **(c)** 1 kHz **(d)** 10 kHz

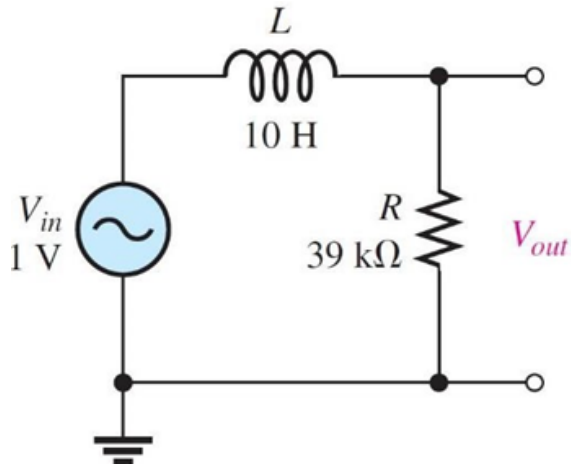

Figure 3

(a) Φ = -0.0923°
(b) Φ = -9.15
(c) Φ = -58.17°
(d) Φ = -86.45°

Lab:

Schematic:

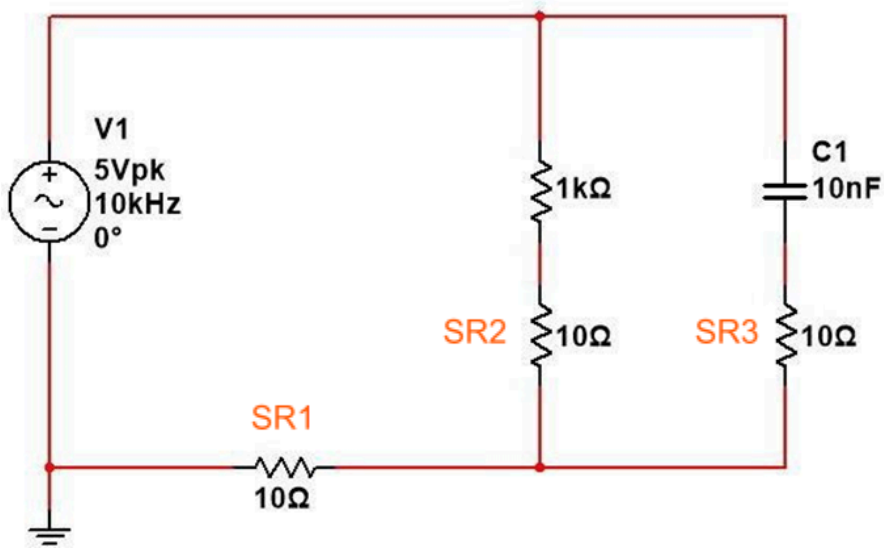

Figure 4

$X_c =$	$\frac{-j}{\omega * C} = \frac{-j}{62832*10n} = -\ 1591.549j\ \Omega$
$Z_{in} =$	$\frac{R1 \times Xc}{R1+Xc} = \frac{1k \times (-1591.549j)}{1k+(-1591.549j)} = 716.9568 - 450.4772j\ \Omega$ $= 846.733\ \Omega$
$\theta =$	-32.14191°

Table 1-Calculations

Current Divider (Phasors are in RMS but the Oscilloscope gives VP-P so leave your results in VP-P).

$I_{in} =$	$\frac{Vin}{Zin} = \frac{10V}{846.733\angle -32.14191°} = 11.8101\angle 32.14191°\text{mA}$
$I_C =$	$\frac{Iin \times R1}{Xc+R1} = \frac{11.8\angle 32.1° mA \times 1k}{-1591.549j+1k} = 6.283185\angle 90.0°\text{mA}$
$I_R =$	$\frac{Iin \times Xc}{Xc+R1} = \frac{11.8\angle 32.1° mA \times -1591.549j}{-1591.549j+1k} = 10\angle 0°\text{mA}$

Table 2-Calculations

	Theory	Experimental	% Deviation
X_C	-1591.549j Ω	-1432.6626j Ω	9.9831296
Z Magnitude	846.733 Ω	826.4463 Ω	2.3958792
Z θ	-32.14191°	-32.1800°	-0.11850571

Table 3

Vsr1= 121mV, Vsr2=105mV, Vsr3=70mV

	Theory Mag (mA)	Theory θ (degree)	Exp Mag (mA)	Exp Delay (μs)	Exp θ	% Dev Mag	% Dev θ
I_C	6.283185	90.0	6.98	25	90.1	-11.090156	-0.111
I_R	10	0	10.5	-0.1	1.23	-5.0	1.23
I_{in}	11.8101	32.14191	12.1	8.012	32.18	-2.4546786	-0.1185

Table 4

Note: We couldn't find the deviation of IR angle properly since the theoretical value is 0 and the oscilloscope reading fluctuates a lot.

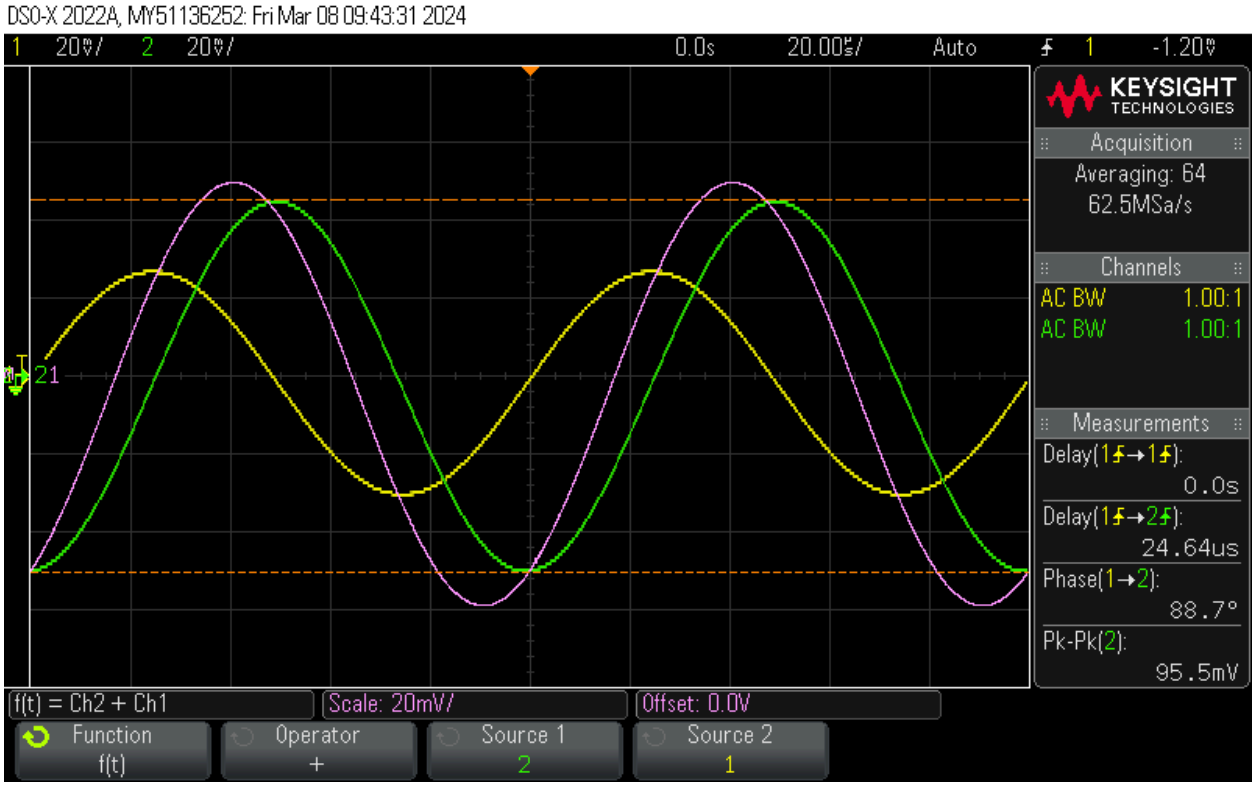

Figure 9 - Screenshot of the in-lab Oscilloscope
Capacitor: Yellow, Resistor: Green, Input: Magenta

Simulations:

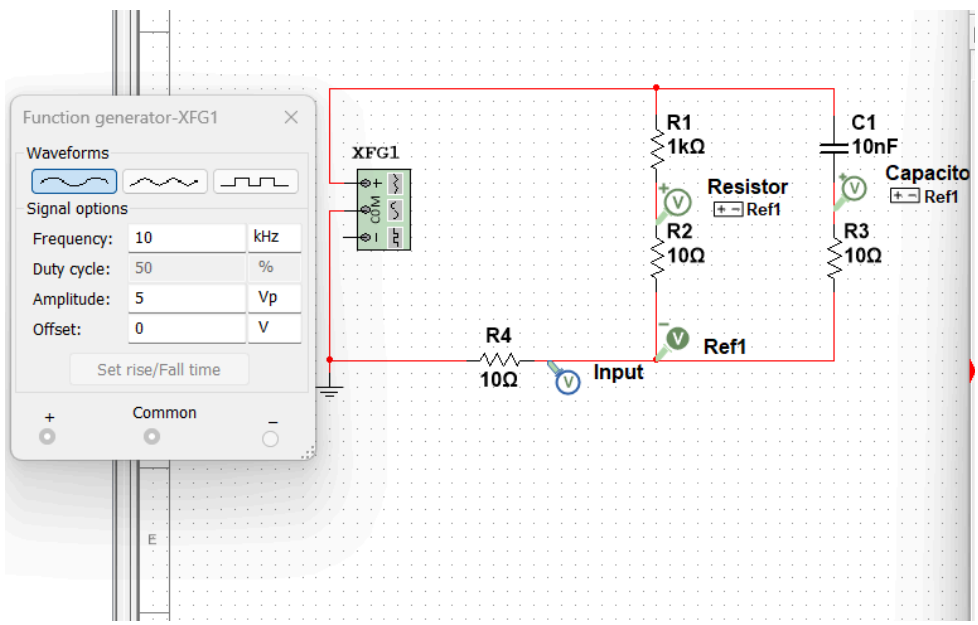

Figure 10

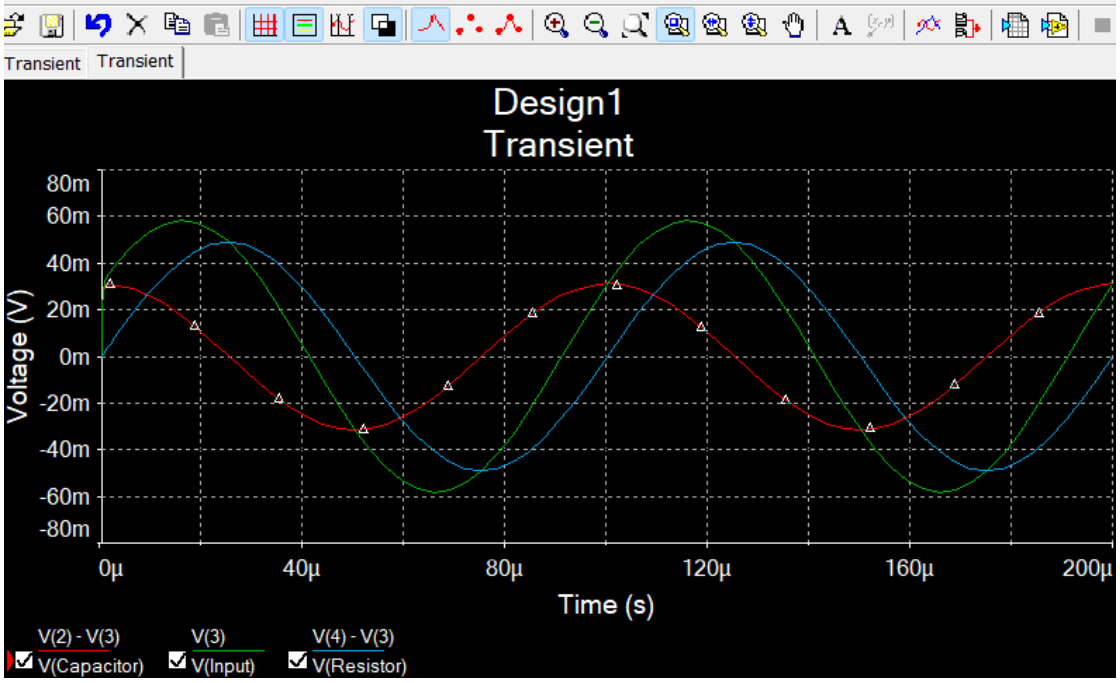

Figure 11

PCB Design:

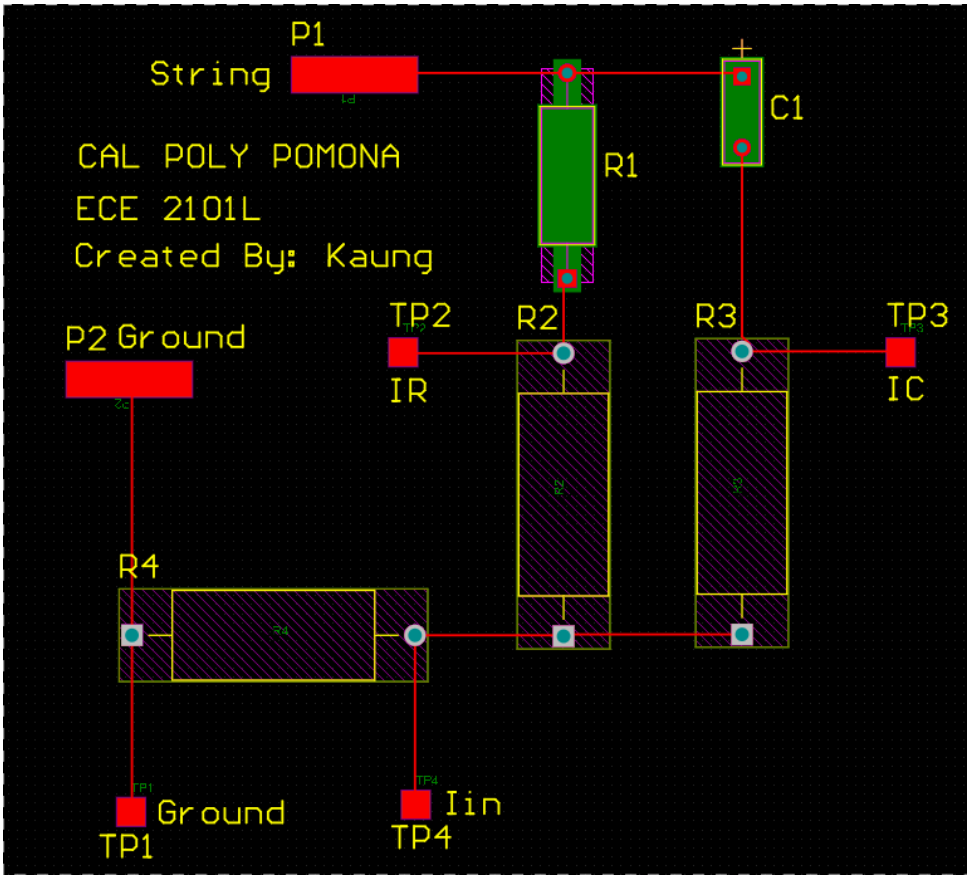

Figure 12

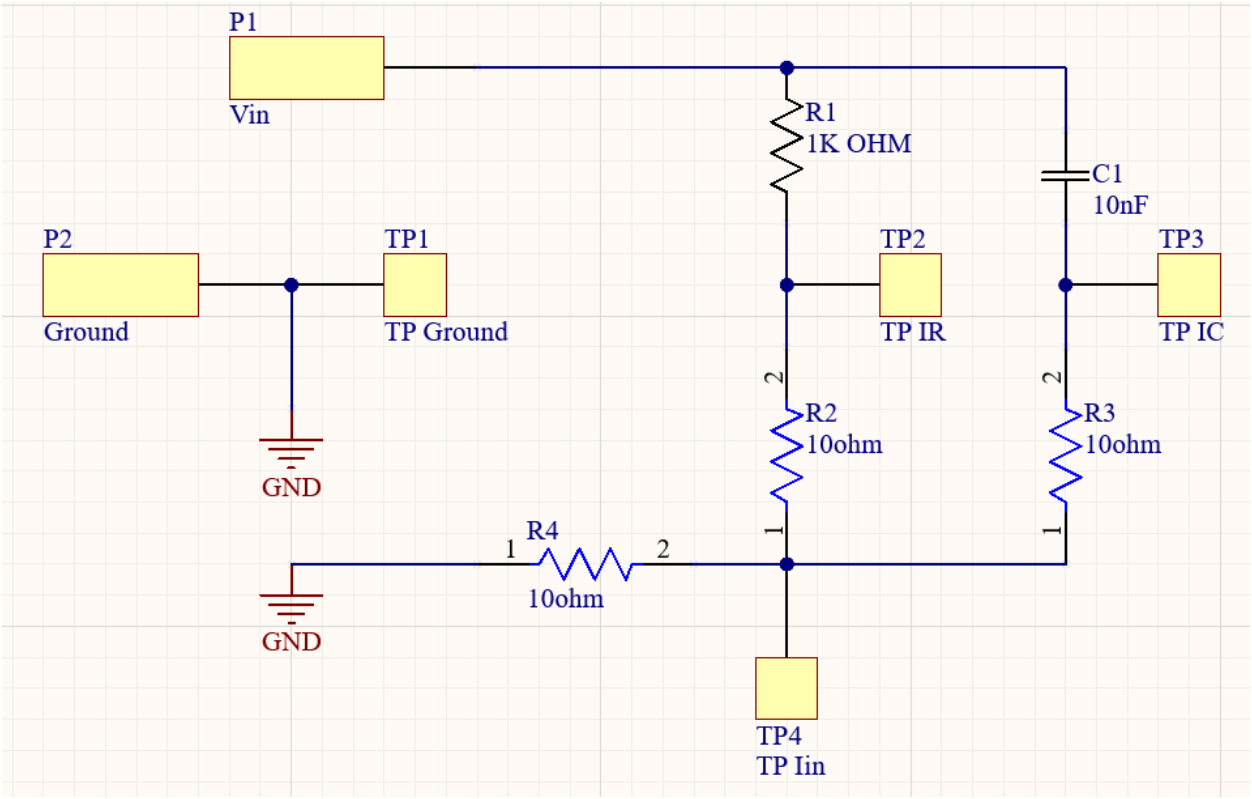

Figure 13

RL Circuit

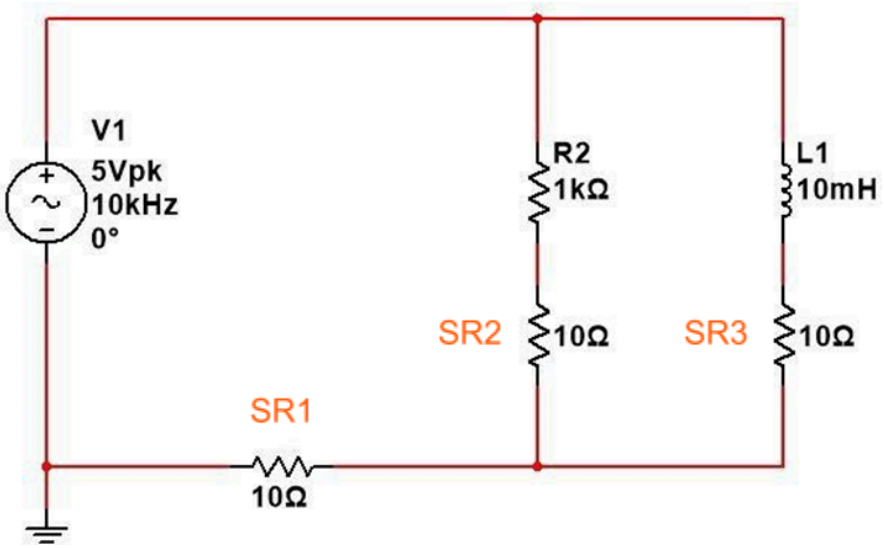

Figure 5

$X_L =$	$j \times \omega \times L = j \times 62832 \times 10m = 628.3185j\ \Omega$
$Z_{in} =$	$\frac{R1 \times Xl}{R1 + Xl} = \frac{1k \times (628.3185j)}{1k + (628.3185j)} = 295.0045 + 446.5962j\ \Omega$ $= 535.2343\ \Omega$
θ =	56.55276°

Table 5-Calculations

Current Divider (Phasors are in RMS but the Oscilloscope gives VP-P so leave your results in VP-P).

$I_{in} =$	$\frac{Vin}{Zin} = \frac{10V}{535.2343\angle 56.55276°} = 18.6834\angle\text{-}56.55276°\text{mA}$
$I_L =$	$\frac{Iin \times R1}{Xl + R1} = \frac{18.6\angle -56.5° mA \times 1k}{628.3185j + 1k} = 15.75156\angle\text{-}88.18577°\text{mA}$
$I_R =$ mA	$\frac{Iin \times Zl}{Xl + R1} = \frac{18.6\angle -56.5° mA \times 628.3185j}{628.3185j + 1k} = 9.800248\angle 0.90242°$

Table 6-Calculations

	Theory	Experimental	% Deviation
X_L	628.3185j Ω	615.28272j Ω	2.0747089
Z Magnitude	535.2343 Ω	500.0000 Ω	6.5829675
Z θ	56.55276°	55.2200°	2.3566666

Table 7

Vsr1=200mV, Vsr2=103 , Vsr3=161mV

	Theory Mag	Theory θ	Exp Mag (mA)	Exp Delay	Exp θ	% Dev Mag	% Dev θ

I_L	15.75156	-88.18577	16.1mA	-22455us	-82.14	-2.21209	6.855720
I_R	9.800248	0.90242	10.3	400ns	1.27	-5.09938	-40.7326
I_{in}	18.6834	-56.55276	20mA	-14.88us	-55.22	-7.04689	2.356666

Table 8

Note: The deviation of IR angle is large because both theoretical and experimental angels are small numbers.

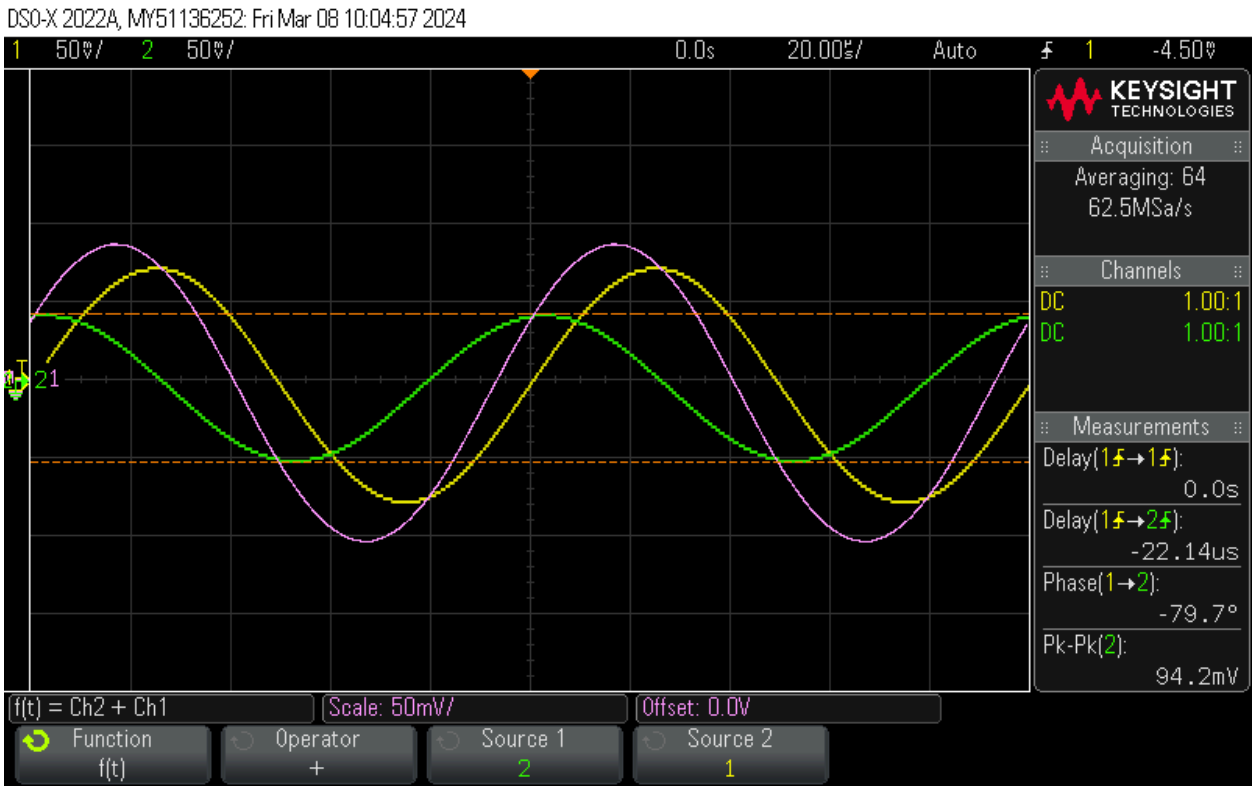

Figure 14 - Screenshot of the in-lab Oscilloscope

Simulation:

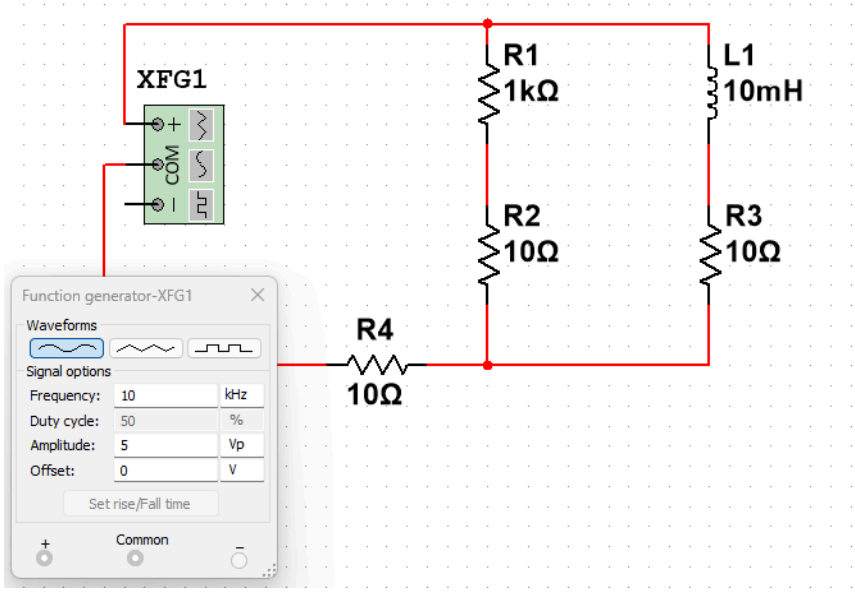

Figure 15

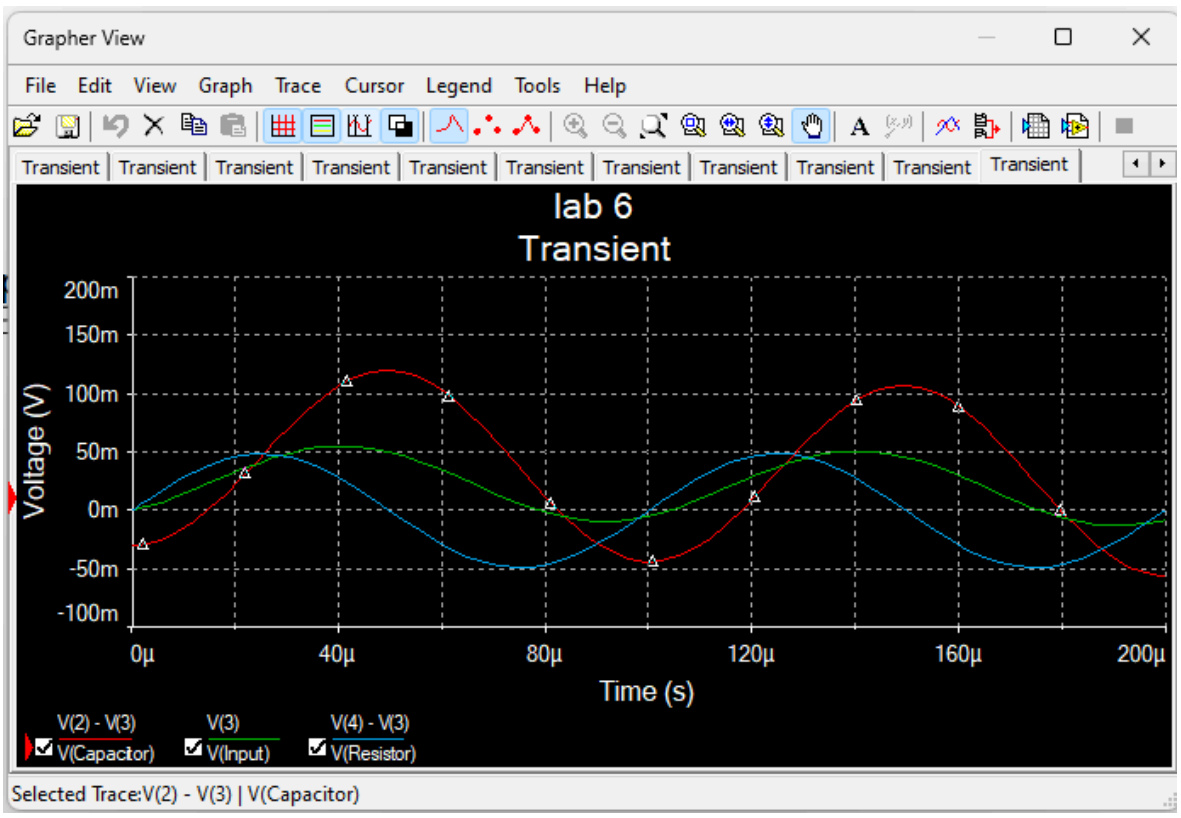

Figure 16

PCB Design:

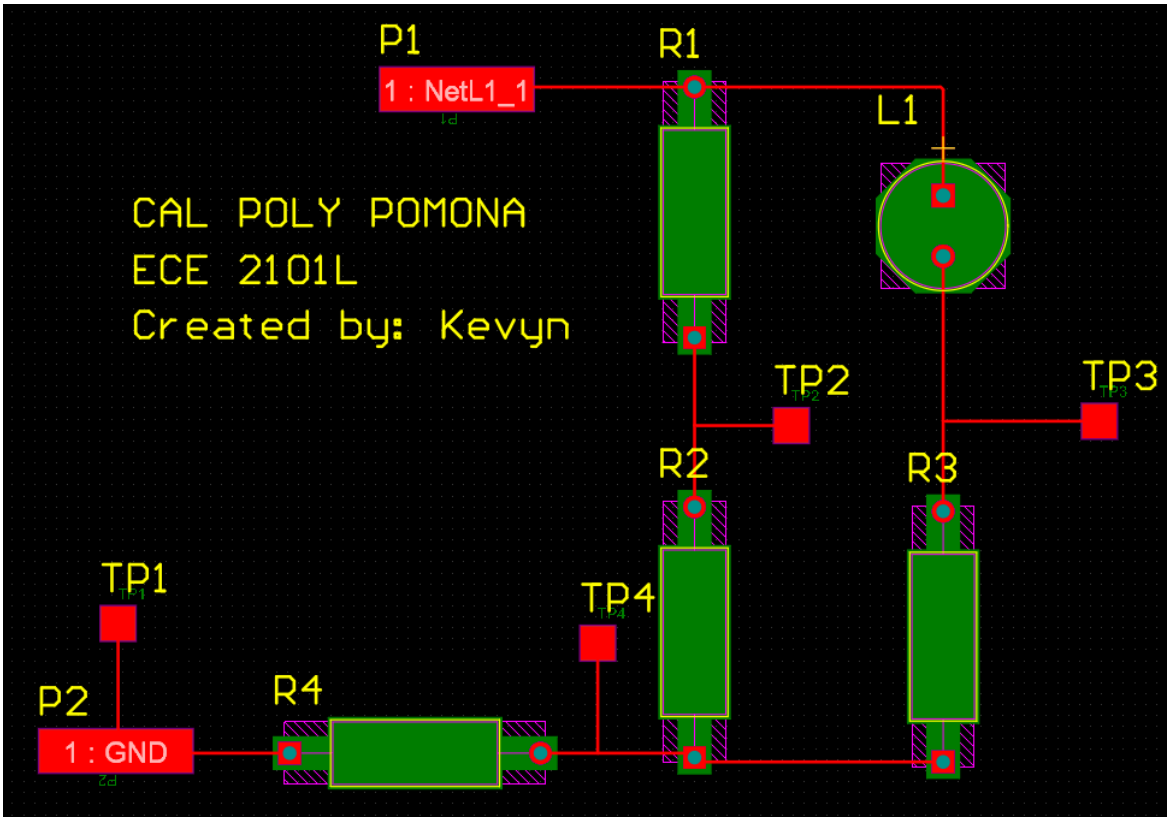

Figure 17

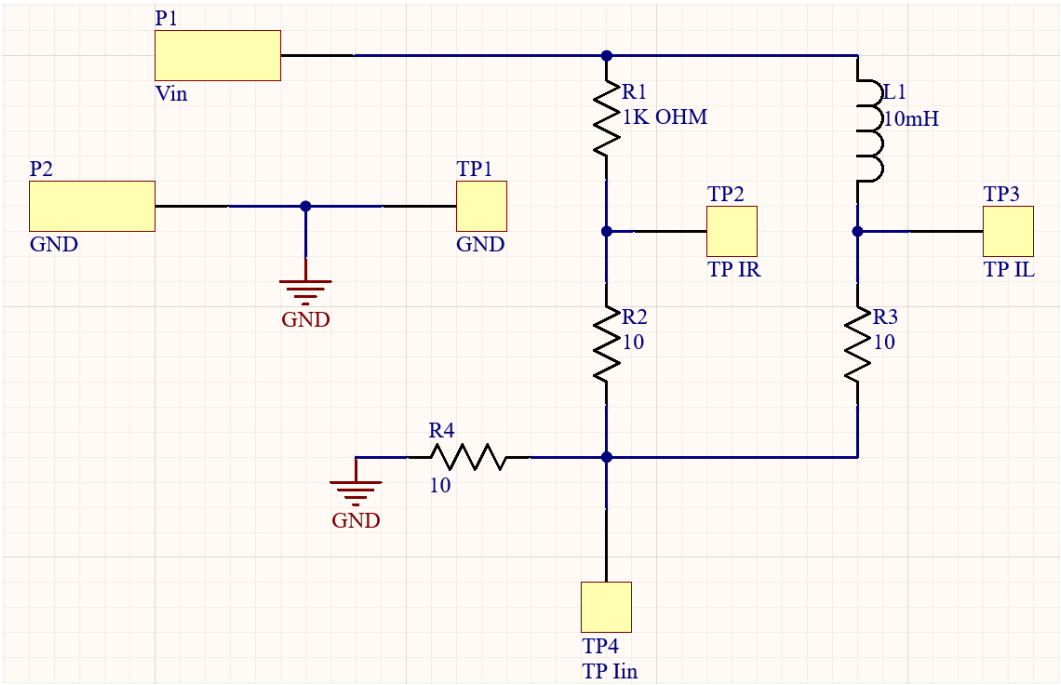

Figure 18

Post Lab:

1- For the lag circuit in Figure 6, determine the phase lag between the input voltage and the output voltage for each of the following frequencies:
(a) 1 Hz **(b)** 100 Hz **(c)** 1.0 kHz **(d)** 10 kHz

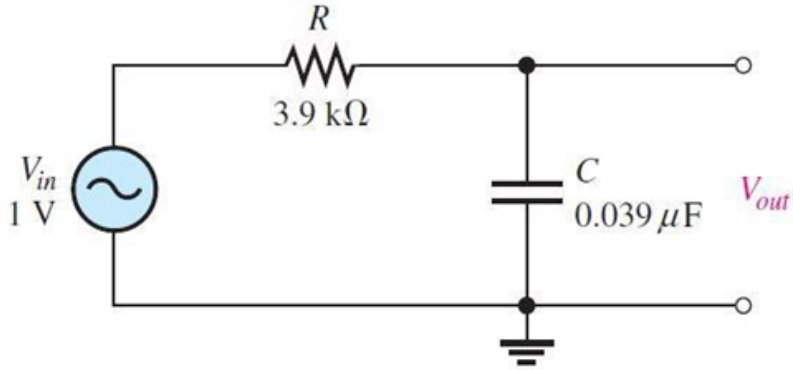

Figure 6

(a) Φ = -0.0547°
(b) Φ = -5.45°
(c) Φ = -43.7°
(d) Φ = -84.02°

2- Determine the voltage across each component in Figure 7 if L1 were open.

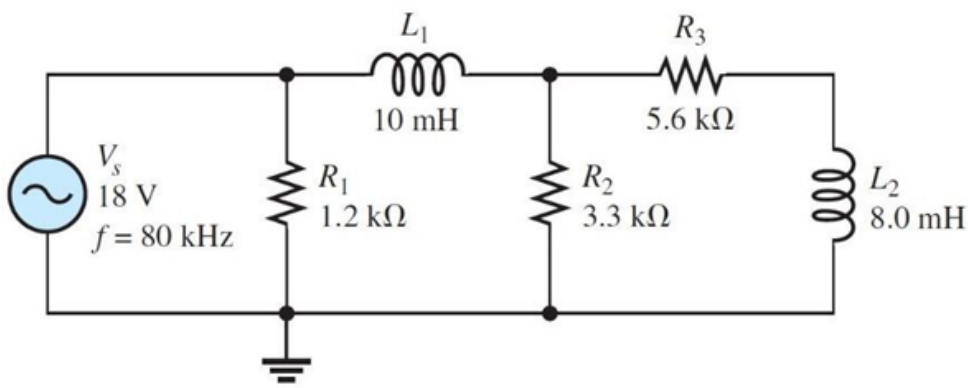

Figure 7

VR1 = 18 V
VR2 = VR3 = VL2 = 0 V

3- Determine the output voltage in Figure 8 for each of the following failure modes:
(a) L1 open **(b)** L2 open **(c)** R1 open **(d)** a short across R2

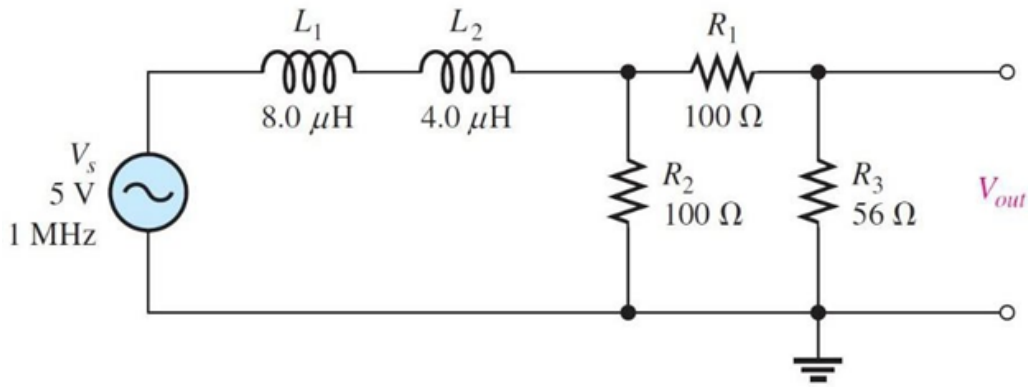

Figure 8

(a) Vout = 0 V
(b) Vout = 0 V
(c) Vout = 0 V
(d) Vout = 0 V

Conclusion

In this lab we used Kirchhoff's Current Law to analyze our parallel RL and RC circuits. Since the oscilloscope cannot measure current directly, we measured all our voltages across 10Ω resistors. These resistors are called current sense resistors and we did this because the voltage will not have a significant difference since 10Ω is not a large resistance. Once we got the voltages, we used KCL to calculate our currents. In the oscilloscope, we added the voltages of VR and VL/VC to get our measured total voltage. Overall, this lab provided us with important analytical and practical skills by teaching us how to use current sense resistors. This is an important skill to have especially when using oscilloscopes.